PRODUCT NO
SEE TABLE

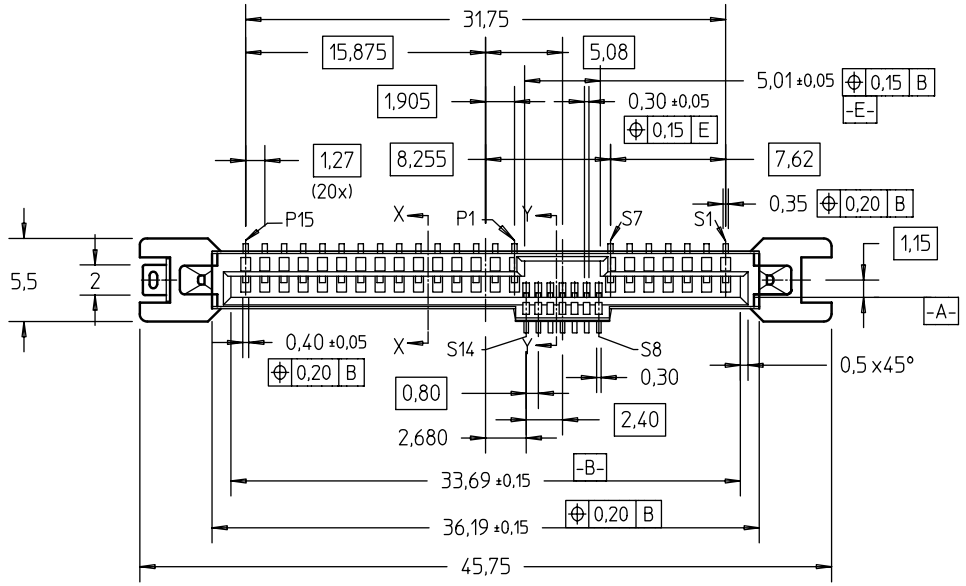

NOTES:

1 MATERIAL:
- 1) HOUSING : HIGH TEMP TERMOPLASTIC, UL 94V-0
  - COLOR : BLACK
- 2) TERMINAL : COPPER ALLOY
- 3) HOLD DOWN : COPPER ALLOY

2 FINISH :
- 1) TERMINAL : 30u" Au PLATING (CONTACT POINT) OVER 50u" NICKEL
- 2) SOLDER TAIL : 100u" min Sn OVER 50u" NICKEL
- 3) HOLD DOWN : 100u" min Sn OVER 50u" NICKEL

3 PER SFF REV 1.1

4 THE STD PACKAGING IS IN TRAY

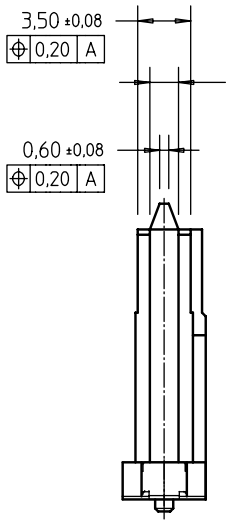

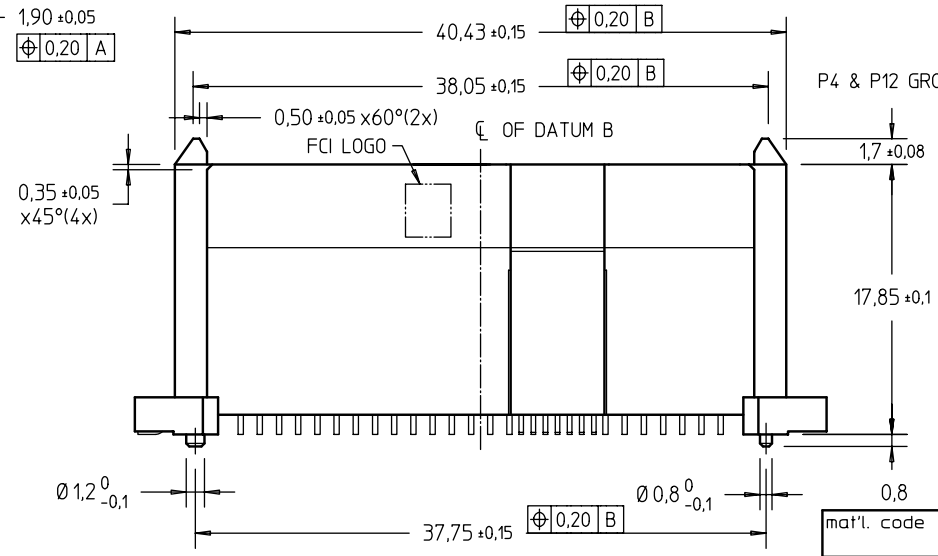

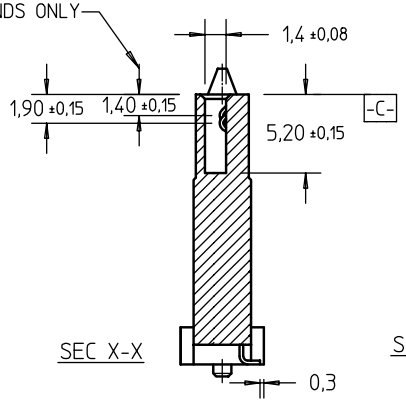

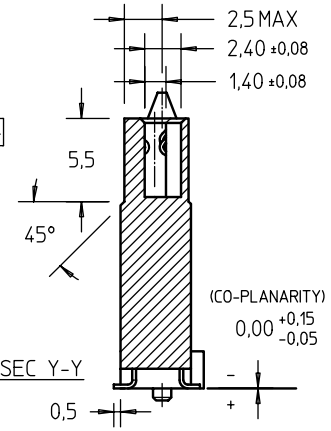

mat'l. code				surface ISO 1302	tolerance ISO 406 ISO 1101	projection	product family SAS
ltr	ecn no	dr	date	tolerances unless otherwise specified			title
A	S04-0265	GLL	2004-12-15	angles ± 2°	linear = ±0,20	mm	SAS RECEPTACLE EXTENDED HEIGHT VERTICAL SMT TYPE ASSY
B	S06-0273	GLL	2006-10-20			scale 2 : 1	
				dr	GL L00	2004-12-15	dwg no 10038334 — sheet 1 of 2 — size A4
				engr	GL L00	2004-12-15	
				chr	GL L00	2006-10-20	
				appd	JOEY NG	2006-10-20	type CUSTOMER Drawing

sheet index	revision	B	B
	sheet	1	2

FCI CONFIDENTIAL

This document is the property of and embodies CONFIDENTIAL and PROPRIETARY information of FCI. No part of the information shown on this document may be used in any way or disclosed to others without the written consent of FCI. Copyright FCI.

FCIconnect.com

form: A4

PRODUCT NO	REMARKS
10038334-001LF	NOTE ⑥,⑦

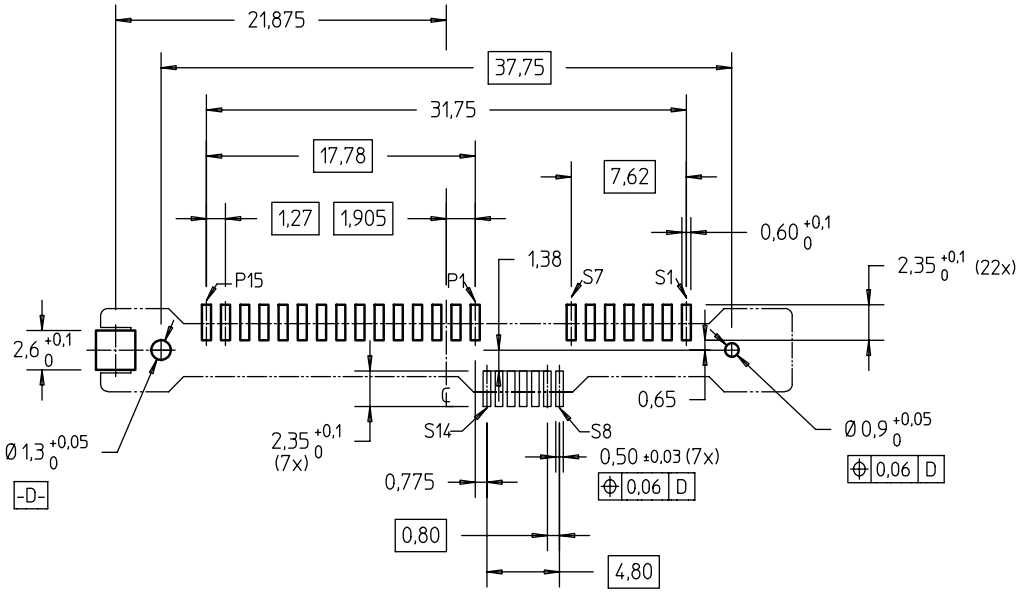

RECOMMENDED PCB LAYOUT

NOTES : (Cont'd)

5 THE HOUSING WILL WITHSTAND EXPOSURE TO 260°C PEAK TEMPERATURE FOR 10 SECONDS IN A CONVECTION, INFRA-RED OR VAPOR PHASE REFLOW OVEN.

⑥ THIS PRODUCT MEETS EUROPEAN UNION DIRECTIVES AND OTHER COUNTRY REGULATIONS AS DESCRIBED IN GS-22-008.

⑦ PART NUMBERS ENDING IN "LF" MEANS FOR NOTE 6 LEAD FREE IDENTIFICATION. P/N XXXXXXXX-XXXLF IS EQUIVALENT TO PREVIOUS P/N XXXXXXXX-XXX.

mat'l. code				surface ISO 1302	tolerance ISO 406 ISO 1101	projection	product family SAS
ltr	ecn no	dr	date	tolerances unless otherwise specified			title
B				angles ± 2°	linear = ±0,20	mm	SAS RECEPTACLE EXTENDED HEIGHT VERTICAL SMT TYPE ASSY
						scale 2 : 1	
				dr	GL L00	2004-12-15	dwg no 10038334 sheet 2 of 2 size A4
				engr	GL L00	2004-12-15	
				chr	GL L00	2006-10-20	
				appd	JOEY NG	2006-10-20	type CUSTOMER Drawing
sheet index	revision sheet	1					

FCI CONFIDENTIAL
FCIconnect.com
This document is the property of and embodies CONFIDENTIAL and PROPRIETARY information of FCI. No part of the information shown on this document may be used in any way or disclosed to others without the written consent of FCI. Copyright FCI.